Double Shaft Mounting Base

11-506	**with locking handle**
11-507	**with locking 5/16 SHCS**

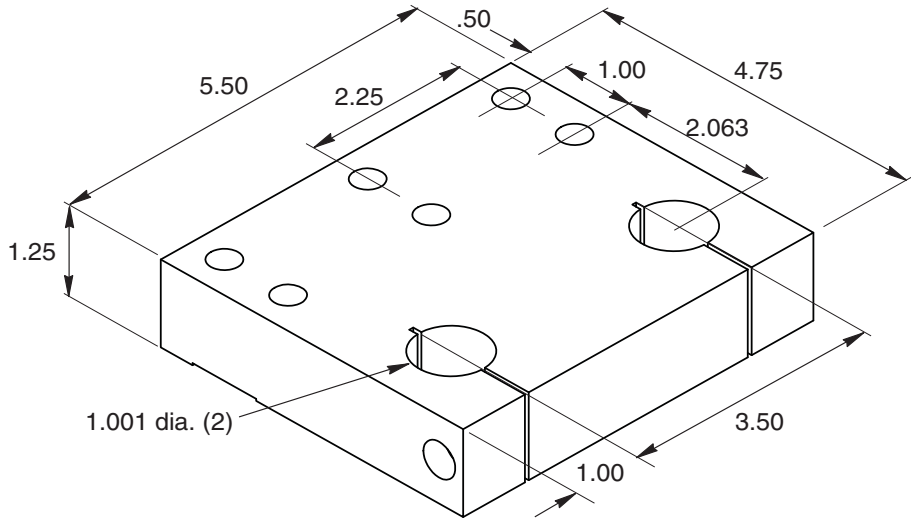

For shafts, see page 496

Recommended
Hardware
(6) 11-223 SHCS
(6) 11-205 T-nut

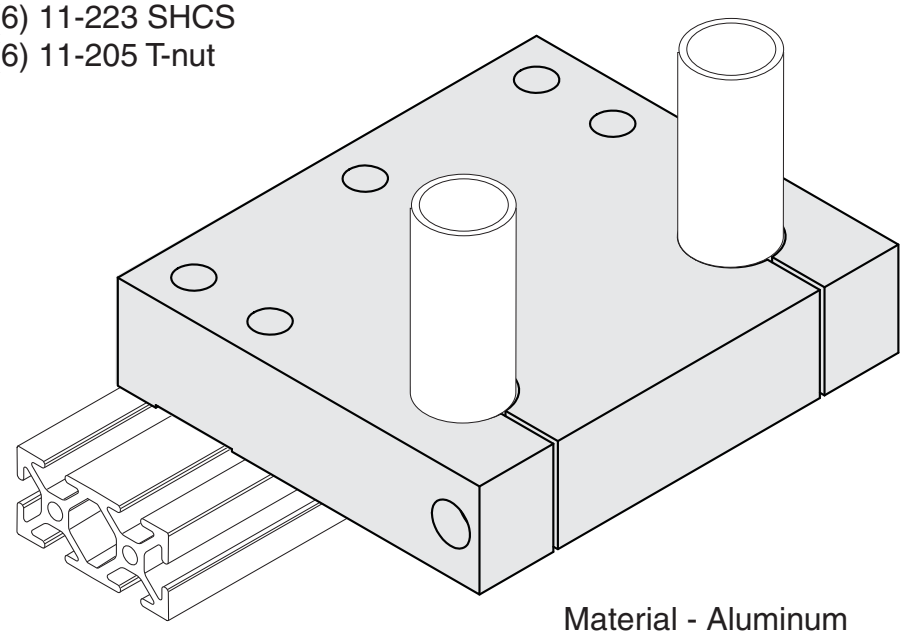

Material - Aluminum
Finish - Clear Anodize

1/4" SLOTS

9116 Virginia Road Lake in the Hills, IL 60156 Telephone 847/458-0993
FAX 847/458-0934 e-mail: info@frame-world.com web: frame-world.com