Welded Steel Angle Bracket

11-63

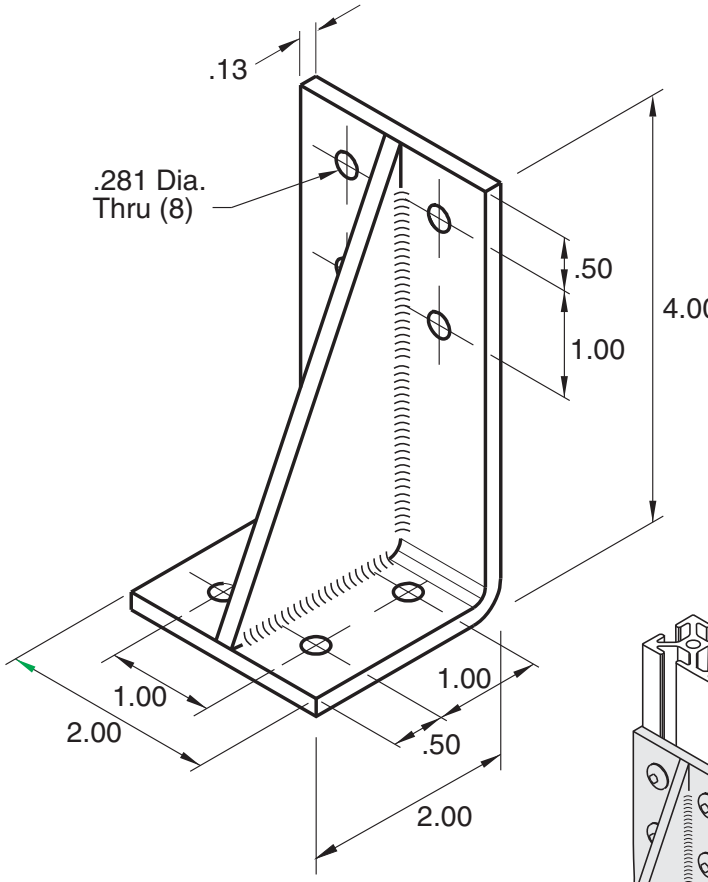

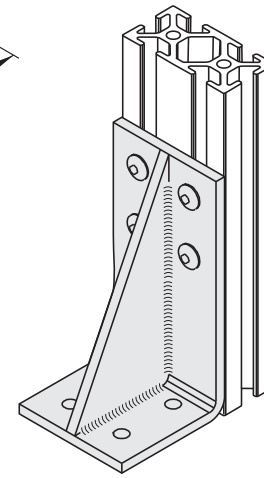

Recommended
Hardware
(8) 11-230 BHCS
(8) 11-210 T-nut

Material - Steel
Finish - Black Powder Coat

1/4" SLOTS

9116 Virginia Road Lake in the Hills, IL 60156 Telephone 847/458-0993
FAX 847/458-0934 e-mail: info@frame-world.com web: frame-world.com