11-97

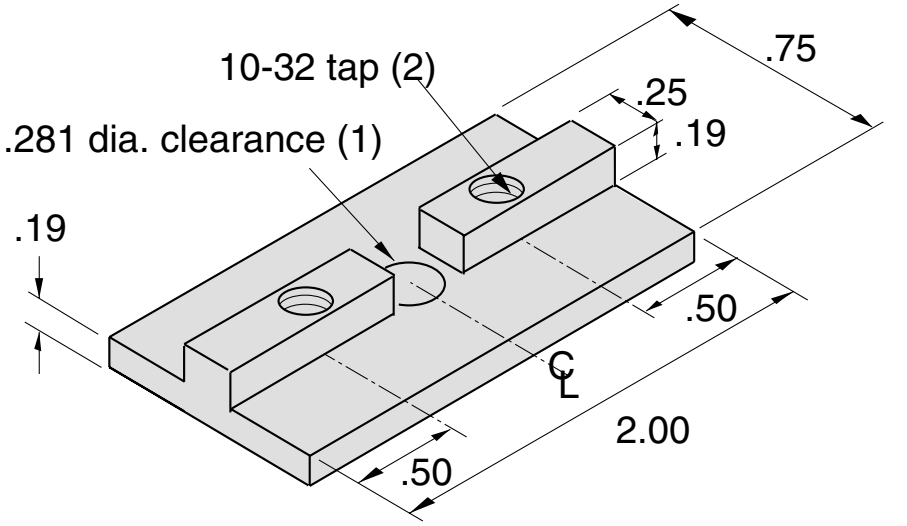

Load Capacity = 50lbs

Bearing Material is DELRIN

9116 Virginia Road Lake in the Hills, IL 60156 Telephone 847/458-0993
FAX 847/458-0934 e-mail: info@frame-world.com web: frame-world.com