1.5 x 3.0 Extrusion Corner Gusset

EB-8

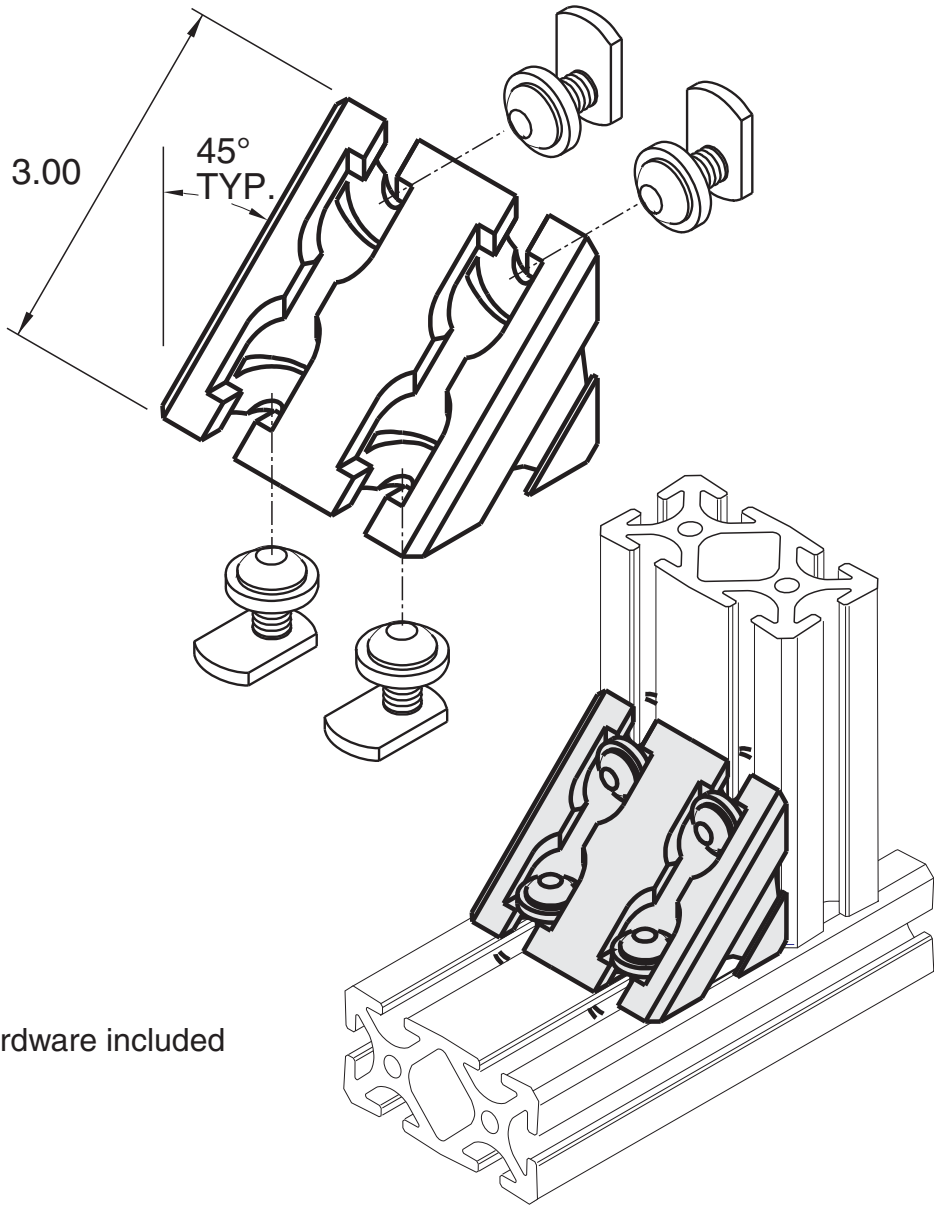

Hardware included

Material - Aluminum (EX-2)
Finish - Clear Anodize

9116 Virginia Road Lake in the Hills, IL 60156 Telephone 847/458-0993
FAX 847/458-0934 e-mail: info@frame-world.com web: frame-world.com