Leveling Anchor Plate

EBP-8

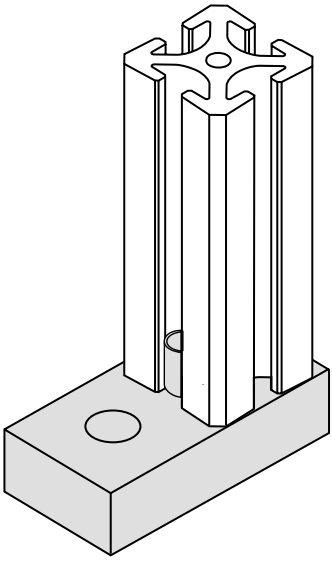

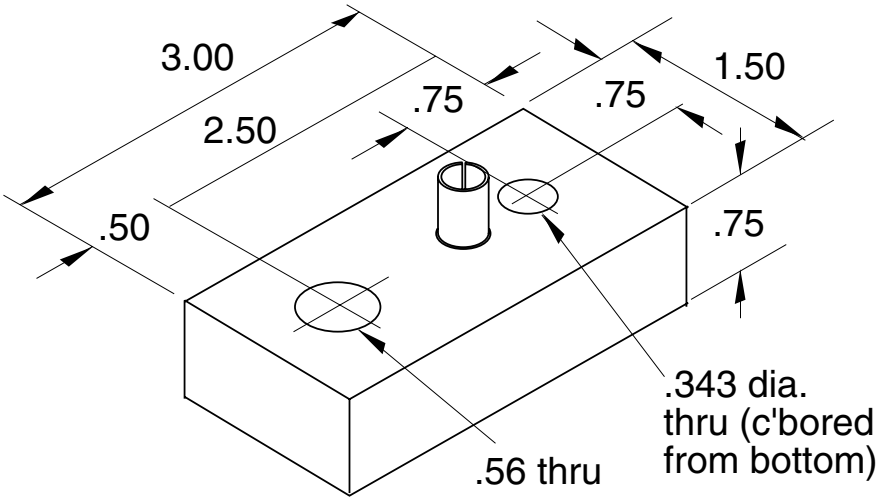

Requires
(1) EF-11-1.0 SHCS

Material - Aluminum
Finish - Clear Anodize

9116 Virginia Road Lake in the Hills, IL 60156 Telephone 847/458-0993
FAX 847/458-0934 e-mail: info@frame-world.com web: frame-world.com